Ceiling Sensor

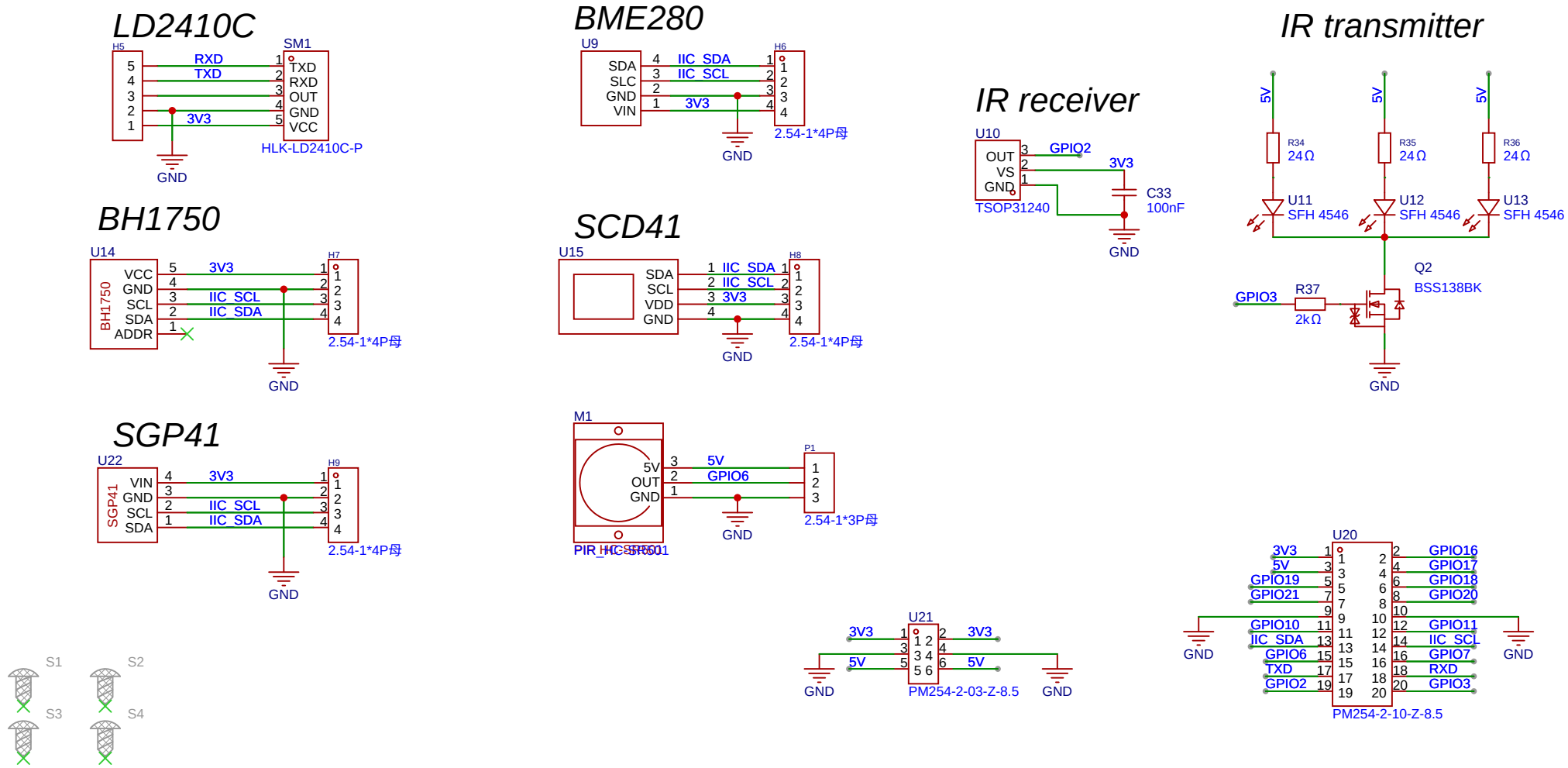

carletz	DOMIX - Domotic module for smart home & co		Create at	2026-02-18	Drawn	carletz
			Update at	2026-02-23	Reviewed	carletz
	Version	Size	Page 1 Total 1	Schematic	S1 - Ceiling Sensor		
	1	A4	EasyEDA	Board	S1 - CEILING SENSOR	Page	Sensor